KONDO SNATCH BLOCK

SINGLE SHEAVE / DOUBLE SHEAVE

(0.5TON - 10TON)

DY x 1S

DY x 1SO

DY x 2S

Description :

Snatch Block is an easy to use, versatile, manual lifting equipment, are used in factories, mines, agriculture, production of electricity, building construction, dock ships, warehouses, machine installation, cargo lifting, etc.

Single Sheave

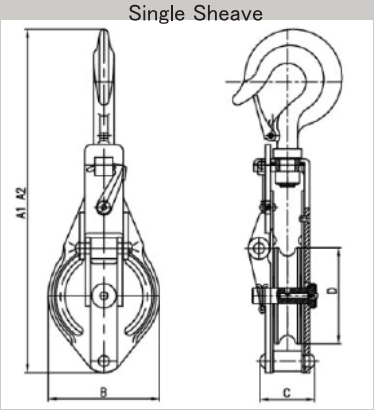

Double Sheave

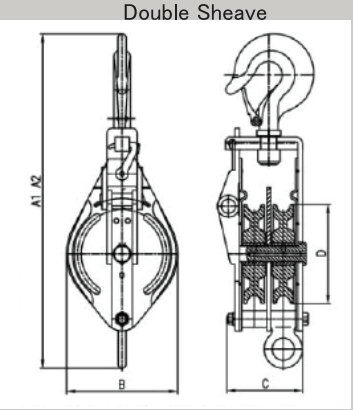

Product's Origin : China

MODEL		WLL	SHEAVE DIA	HOOK	EYE	HOOK/EYE		FOR WIRE DIA	N.W. (kg)	
HOOK TYPE	EYE TYPE	(ton)	(mm)	A1 (mm)	A2 (mm)	B (mm)	C (mm)	(mm)	1 SHEAVE	2 SHEAVE
75DY x 1S	75DY x 1SO	0.5	75	286	227	87	50	8	1.6	2.8
75DY x 2S	75DY x 2SO									
100DY x 1S	100DY x 1SO	1	100	311.5	284.5	112	55.5	10	3.5	4.3
100DY x 2S	100DY x 2SO									
125DY x 1S	125DY x 1SO	1.5	125	370	344	140	63.5	13	4.6	7.8
125DY x 2S	125DY x 2SO									
150DY x 1S	150DY x 1SO	2	150	442.5	417	168	101	16	7.7	12.2
150DY x 2S	150DY x 2SO									
180DY x 1S	180DY x 1SO	3	180	498	478	204	107	19	11	18.5
180DY x 2S	180DY x 2SO									
200DY x 1S	200DY x 1SO	4	200	590.5	556	226	128	22	19.3	31
200DY x 2S	200DY x 2SO									
250DY x 1S	250DY x 1SO	5	250	590.5	651	276	147	25	33.8	49.8
250DY x 2S	250DY x 2SO									
300DY x 1S	300DY x 1SO	6	300	795	775	330	162	26	48	72
300DY x 2S	300DY x 2SO									
350DY x 1S	350DY x 1SO	10	350	934	898	395	178	28	66	102
350DY x 2S	350DY x 2SO									

KONDO HEAVY DUTY SNATCH BLOCK

HOOK TYPE, MODEL : LH

SHACKLE TYPE, MODEL : LS

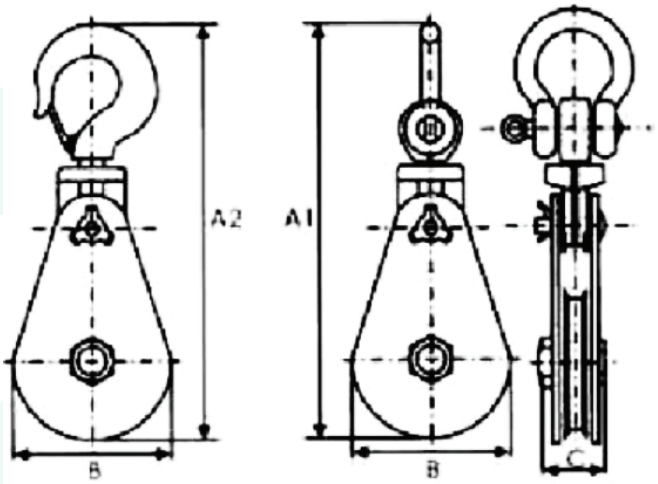

Product's Origin : China

MODEL		WLL	SHEAVE DIA	A1	A2	B	C	FOR WIRE DIA	N.W. (kg)	
HOOK TYPE	SHACKLE TYPE	(ton)	(mm)	(mm)	(mm)	(mm)	(mm)	(mm)	HOOK	SHACKLE
LH3" x 1	LS3" x 1	2	75	292	286	82	70	7-9	3.9	3.8
LH4(1/2)" x 1	LS4(1/2)" x 1	4	115	358	345	120	70	10-12	6.2	6.2
LH6" x 1	LS6" x 1	4	150	412	399	160	70	16-18	8.4	8.3
		8		498	475	160	93	20-22	14.1	14.1
LH8" x 1	LS8" x 1	8	200	549	528	210	93	20-22	19	18.7
		15		672	663	230	102	22-24	34	33
LH10" x 1	LS10" x 1	10	250	695	679	260	115	24-26	36	34.7
		12		701	679	260	115	24-26	36	34.7
LH12" x 1	LS12" x 1	12	300	797	767	310	133	24-26	56	54
		15		800	788	310	133	24-26	58	55
LH14" x 1	LS14" x 1	22	355	960	952	365	140	28-32	112	109
LH16" x 1	LS16" x 1	22	400	1027	1019	415	140	28-32	122	118
		30		1085	1126	415	155	32-35	170	164
LH20" x 1	LS20" x 1	30	500	1177	1256	514	162	32-35	213	208
LH24" x 1	LS24" x 1	50	600	1445	1525	625	240	46-50	408	418
LH30" x 1	LS30" x 1	85	760	1960	1910	800	288	56-64	810	840